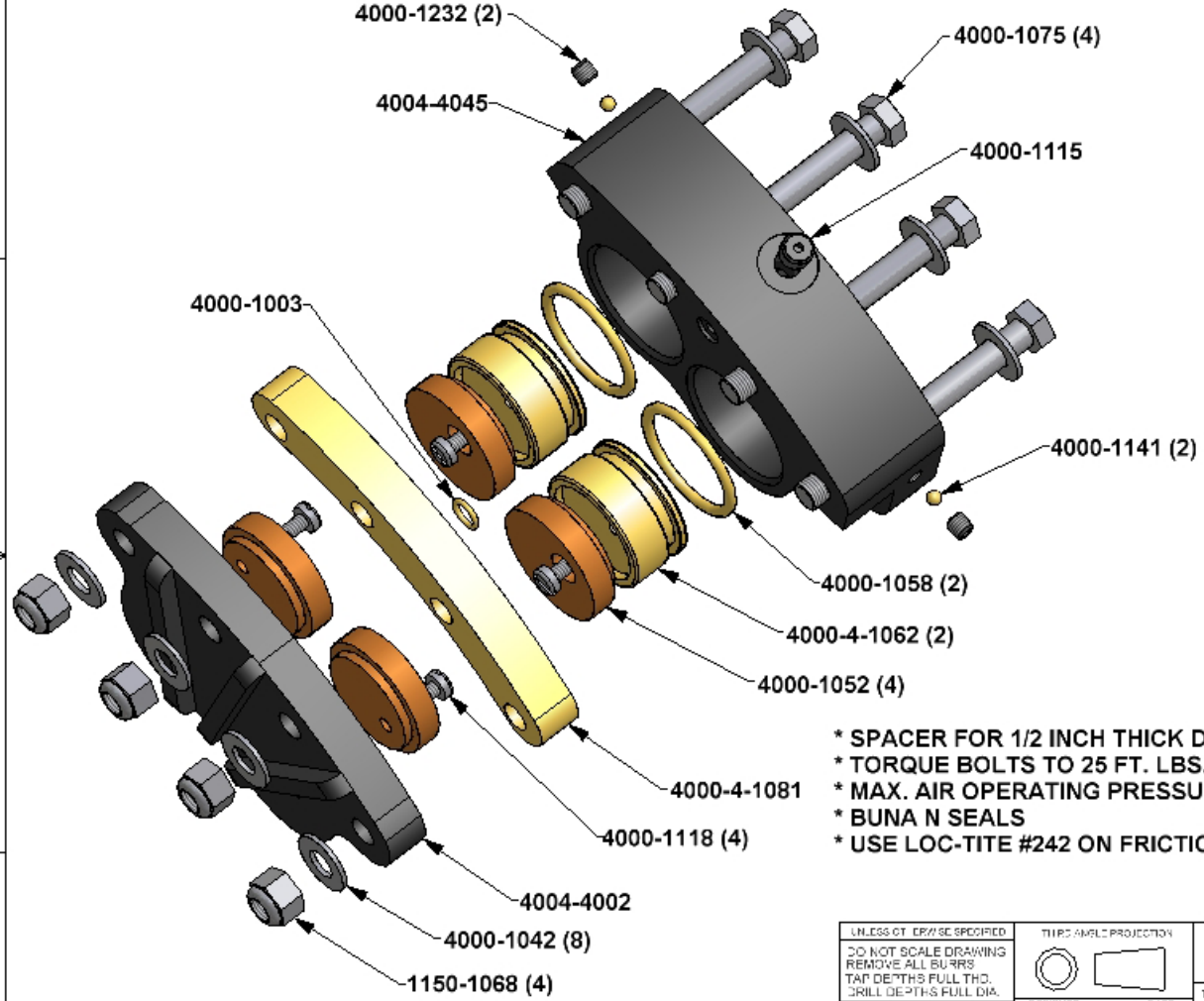


* SPACER FOR 1/2 INCH THICK DISC
* TORQUE BOLTS TO 25 FT. LBS.
* MAX. AIR OPERATING PRESSURE -- 200 PSI
* BUNA N SEALS
* USE LOC-TITE #242 ON FRICTION PAD SCREWS

| | | |
|---|---|---|
| UNLESS OTHERWISE SPECIFIED<br>DO NOT SCALE DRAWING<br>REMOVE ALL BURRS<br>TAP DEPTHS FULL THD.<br>DRILL DEPTHS FULL DIA. | THIRD ANGLE PROJECTION | W.C. BRANHAM INC.<br>RIVER FALLS, WI. |
| TOLERANCES<br>2 PLACE +/-0.010<br>3 PLACE +/-.005 | DESIGNER DATE<br>WCB 12/09/02<br>CHECKED DATE | TITLE<br>P200SE CALIPER |
| FINISH<br>EXTERNAL CLASS 2A<br>INTERNAL CLASS 2B | SCALE<br>CLASS | DRAWING NO. 4004-0012<br>REVISION |