* SPACER FOR 3/8 INCH THICK DISC
* TORQUE BOLTS TO 15 FT. LBS.
* MAX. OPERATING PRESSURE -- 1,000 PSI
* BUNA N SEALS FOR PETROLEUM BASED OILS
* USE LOC-TITE # 242 ON FRICTION PAD SCREWS

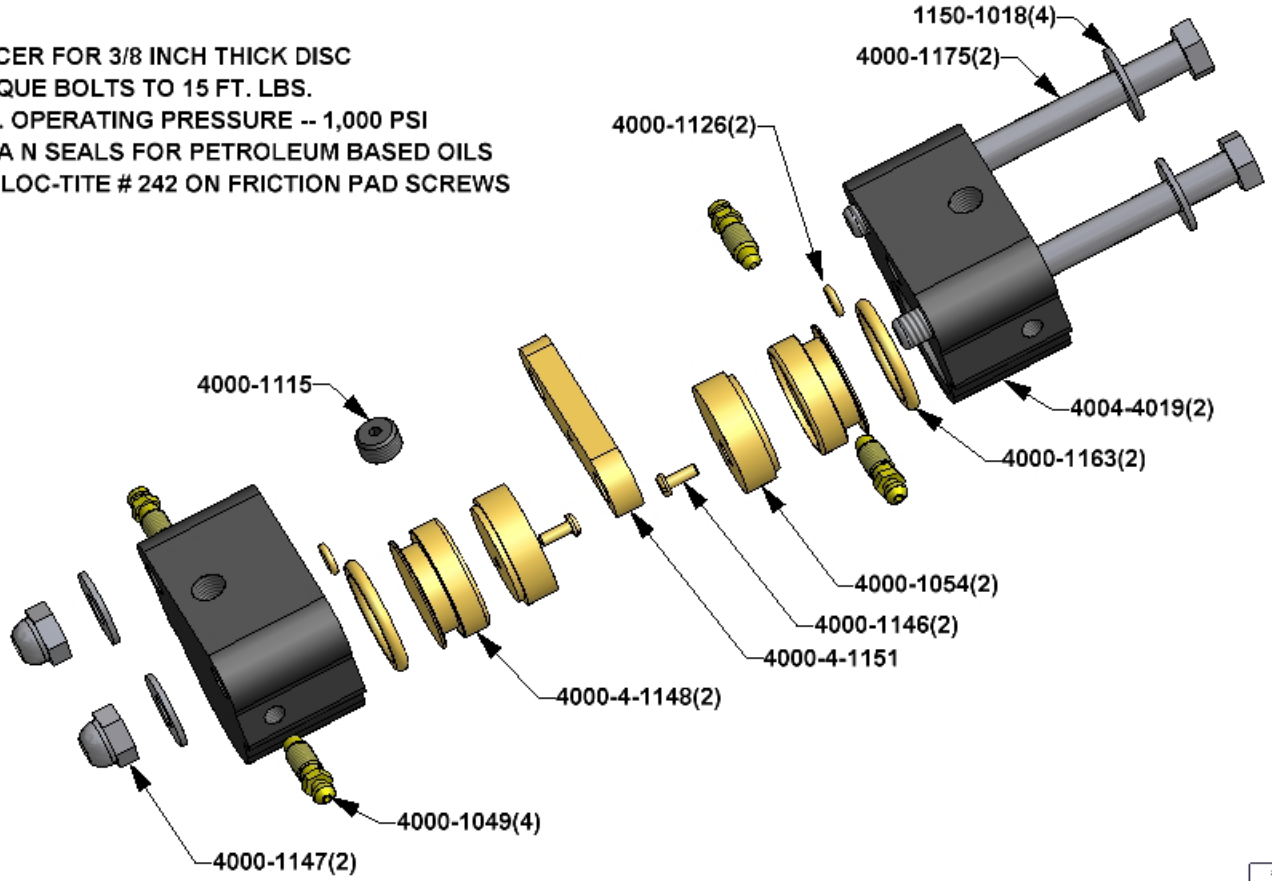

UNLESS OTHERWISE SPECIFIED DO NOT SCALE DRAWING REMOVE ALL BURRS TAP DEPTHS FULL THD. DRILL DEPTHS FULL D.A.	THIRD ANGLE PROJECTION	W.C. BRANHAM INC. RIVER FALLS, WI.
TOLERANCES 2 PLACE +/-.010 3 PLACE +/-.005	DESIGNED WCB 01/08/01	H38DL CALIPER
FITTINGS EXTERNAL CLASS 2A INTERNAL CLASS 2B	CHECKED / DATE SCALE TO ASSY	DRAWING NO. H38DL REVISION

SIZE C